MECHANICAL SPECIFICATIONS

(Unit: m/m)

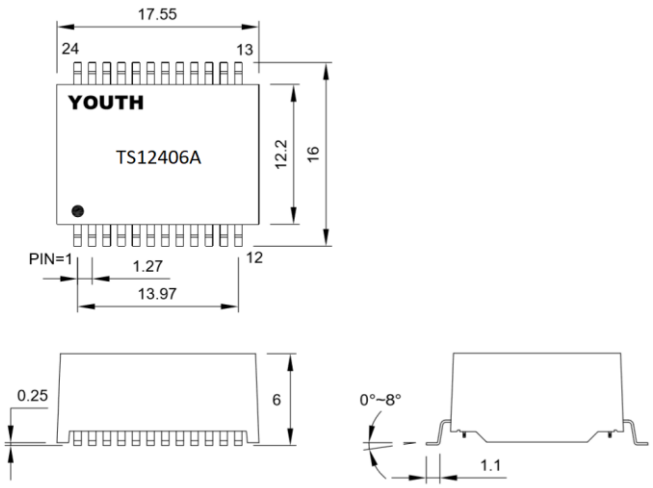

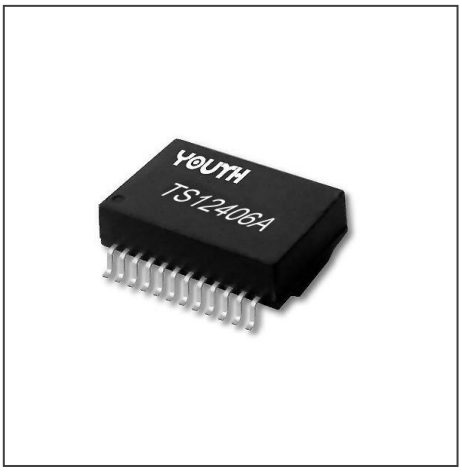

10G BASE-T TRANSFORMER MODULES

- Designed to meet IEEE 802.3ab requirement, including 220uH OCL with 8mA bias
- Compliance with ROHS requirements
- Operating Temperature range: 0°C ~ +70°C
- Storage Temperature range: -25°C ~ +125°C
- Package : 350PCS/Reel ; 3500PCS/Big Carton

ELECTRICAL SPECIFICATIONS @ 25°C

Part Number	Insertion Loss (dB Max)					Return Loss (dB Min)				
Freq.	0.1-1 MHz	1-200 MHz	200-300 MHz	300-400 MHz	400-500 MHz	1-100 MHz	100-200 MHz	200-250 MHz	250-300 MHz	300-500 MHz
TS12406A	-3.0	-1.2	-1.5	-2.0	-3.0	-18	-16	-15	-12	-8.0

Continue

Part Number	OCL(uH Min) @100KHz/0.1V	Turns Ratio (TX:RX±5%)	Cw/w (pF Max)	L.K(uH Max) @100KHz/0.1V	Hi-pot
TS12406A	220	1CT:1CT	30	0.5	1500Vrms

SCHEMATICS

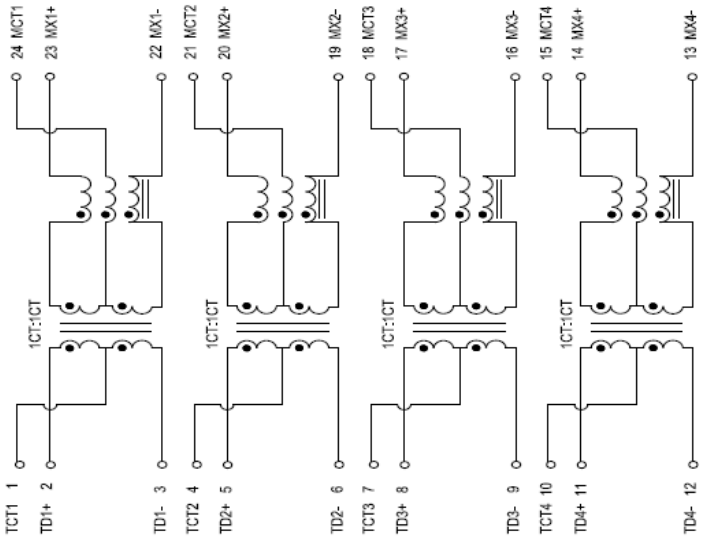

LAN